OUTDOOR USE ONLY

KDS-1 KDS-160 KDS-182 KDS-982

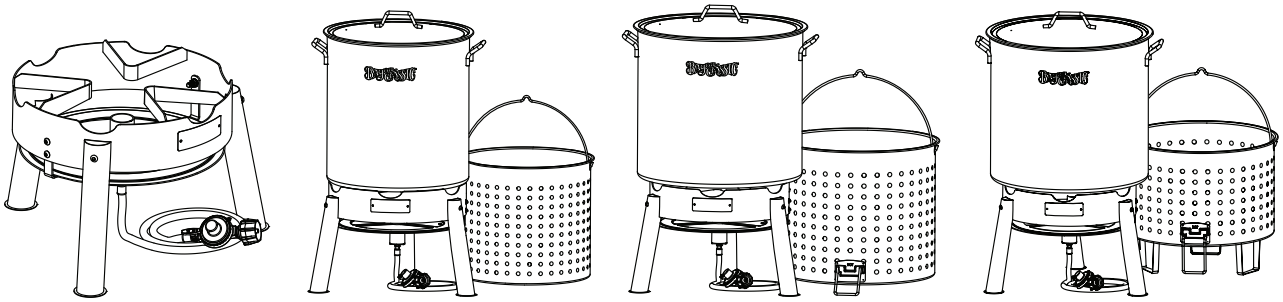

OWNER'S MANUAL

SAFETY ALERTS, ASSEMBLY & OPERATING INSTRUCTIONS
GENERAL MAINTENANCE & STORAGE

KEEP THIS MANUAL FOR FUTURE REFERENCE

NOT FOR COMMERCIAL USE

This Instruction Manual contains important information necessary for the proper assembly and safe use of the appliance. You must carefully read and follow all warnings and instructions before assembling and using the appliance. Follow all warnings and instructions when using the appliance. This manual is for Barbour International Bayou Classic® products only. If you are using another manufacturer's product, refer to the manual supplied with that product. Only use approved Bayou Classic® replacement parts and accessories with this appliance. For Questions, or to order, please contact:

Barbour International, Inc. • 101 Cypress Way, Brandon, MS 39042
1-800-864-6194 (English Only) • Monday - Friday 7:30am - 4:30pm CST

www.thebayou.com

SAFETY SYMBOLS

DANGER

Not following these instructions will most certainly result in fire or explosion which will cause property damage, personal injury, or death.

WARNING

Hazard or unsafe practices could result in severe property damages, personal injury, or death.

CAUTION

Hazard or unsafe practices possibly resulting in minor property damages, personal injury, or death.

DANGER

IF YOU SMELL GAS:

- **Shut off gas to the appliance.**
- **Extinguish any open flame.**
- **Open Lid.**
- **If odor continues, keep away from the appliance and immediately call your fire department.**

Failure to follow these instructions could result in fire or explosion which could cause property damage, personal injury or death.

DANGER

- **Never operate this appliance unattended, or within 3 m/10 ft of any structure, combustible material or other gas cylinder.**
- **Never operate this appliance within 7.5 m/25 ft of any flammable liquid.**
- **Heated liquids remain at scalding temperatures long after the cooking process. Never touch, move, or store the cooking appliance until liquids have cooled to 45°C/115°F or less.**
- **If a fire should occur, keep away from the appliance and immediately call your fire department.**
- **This appliance is not intended for and should never be used as a heater.**
- **Never use glassware, plastic, or ceramic cookware with this appliance.**
- **Do not walk between the cooker and the propane tank; the connecting hose creates a tripping hazard. Tripping over the hose could overturn the cooker.**
- **Never use a cooking vessel larger than 48.3 cm/19 in diameter, and more than 96.5 L/102 Qt in volume.**
- **Never use a cooking vessel smaller than 39.4 cm/15.5 in diameter, and less than 56.8L/60-qt in volume**
- **Do not fill cooking vessel beyond maximum fill line. If no max fill line is present, follow instructions in this manual for establishing proper water levels.**

Failure to follow these instructions could result in fire or explosion which could cause property damage, personal injury or death

⚠ WARNING ⚠

- **Sober adult operation ONLY! Use of alcohol, prescription or nonprescription drugs may impair ability to properly assemble or safely operate appliance.**
- **Do not use appliance for anything other than its intended purpose.**
- **This appliance is for OUTDOOR USE ONLY, and shall not be used in a building, garage or any other enclosed area.**
- **Minimum clearance for this appliance shall be at least 3 m/10 ft from any structure or combustible material. Do not use appliance on or under any apartment or condominium balcony or deck. For more details, see instructions for placement of cooker in this manual.**
- **This appliance is not intended for use in or on a boat or recreational vehicle.**
- **Avoid bumping of or impact with the appliance to prevent spillage or splashing of hot cooking liquid.**
- **Keep children and pets away from the cooking area at all times.**
- **Use caution when placing anything in a cooking vessel while the appliance is in operation. Never drop food or accessories into hot cooking liquid. Lower food and accessories S-L-O-W-L-Y into the cooking liquid in order to prevent splashing or overflow.**
- **Always take care when removing food to avoid burns from steam or hot cooking liquids**
- **Always have a Type BC or ABC fire extinguisher readily accessible during operation.**
- **This appliance is not a fryer. It is not for frying turkeys.**
- **In the event of rain, snow, hail, sleet or other forms of precipitation while cooking, cover the cooking vessel immediately and turn off the appliance burner(s) and gas supply. Do not attempt to move the appliance or cooking vessel.**
- **All food products MUST be completely thawed before cooking.**

If you have any doubts or concerns about your ability to use this product contact Barbour International, Inc. Should you still have concerns about operating this product, then do not use. Contact your dealer for return or refund. Strict compliance to these instructions, plus common sense operation, are primary accident prevention measures. Restrict the use of this appliance to adults who can read, understand and follow the warnings and instructions found in this manual.

Safety Precautions & Warnings

Outdoor gas appliance does not have automatic thermostat controls and must be attended and monitored at all times during use.

NEVER LEAVE UNATTENDED

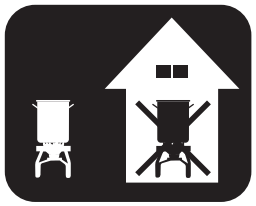

OUTDOOR USE ONLY

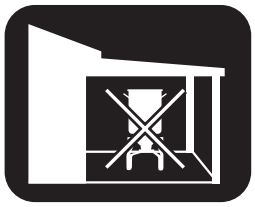

NEVER USE UNDER FLAMMABLE OVERHANG

NEVER USE ON FLAMMABLE SURFACES

KEEP CHILDREN AND PETS AWAY FROM COOKER

NEVER LEAN OVER BURNER

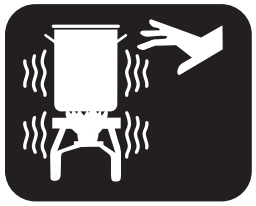

HOT DURING AND AFTER USE!

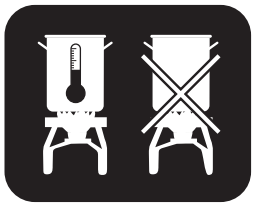

USE THERMOMETER

TRIP HAZARD
WATCH YOUR STEP

KEEP FIRE EXTINGUISHER NEARBY

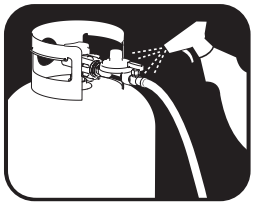

ALWAYS PERFORM GAS LEAK TEST

Failure to follow these instructions could result in fire or explosion which could cause property damage, personal injury or death!

REMEMBER: THINK SAFETY AND USE COMMON SENSE!

LIMITED WARRANTY

Barbour International, Inc. ("Vendor") warrants to the original retail purchaser of this gas appliance and no other person, that if this gas appliance is assembled and operated in accordance with the printed instructions accompanying it, then for a period of one (1) year from the date of purchase, all parts in such gas appliance shall be free from defects in material and workmanship. Vendor may require reasonable proof of your date of purchase from an authorized retailer or distributor. Therefore, you should retain your sales slip or invoice. This Limited Warranty shall be limited to the repair or replacement of parts, which prove defective under normal use and service and which Vendor shall determine in its reasonable discretion upon examination to be defective. Before returning any parts, you should contact Vendor's Customer Service Department using the contact information listed below. If Vendor confirms, after examination, a defect covered by this Limited Warranty in any returned part, and if Vendor approves the claim, Vendor will replace such defective part without charge. If you return defective parts, transportation charges must be prepaid by you. Vendor will return replacement parts to the original retail purchaser, freight or postage prepaid.

This Limited Warranty does not cover any failures or operating difficulties due to accident, abuse, misuse, alteration, misapplication, improper installation or improper maintenance or service by you or any third party, or failure to perform normal and routine maintenance on the gas appliance, as set out in this owner's manual. In addition, the Limited Warranty does not cover damage to the finish, such as scratches, surface chips and cracks, discoloration, rust or other weather damage, after purchase.

This Limited Warranty is in lieu of all other express warranties. Vendor disclaims all warranties for products that are purchased from sellers other that authorized retailers or distributors. AFTER THE PERIOD OF THE ONE (1)-YEAR EXPRESS WARRANTY, VENDOR DISCLAIMS ANY AND ALL IMPLIED WARRANTIES, INCLUDING WITHOUT LIMITATION THE IMPLIED WARRANTIES OF MERCHANTABILITY AND FITNESS FOR A PARTICULAR PURPOSE. FURTHER, VENDOR SHALL HAVE NO LIABILITY WHATSOEVER TO PURCHASER OR ANY THIRD PARTY FOR ANY SPECIAL, INDIRECT, PUNITIVE, INCIDENTAL, OR CONSEQUENTIAL DAMAGES. Vendor assumes no responsibility for any defects caused by third parties. This Limited Warranty gives the purchaser specific legal rights; a purchaser may have other rights depending upon where he or she lives. Some jurisdictions do not allow the exclusion or limitation of special, incidental or consequential damages, or limitations on how long a warranty lasts, so the above exclusion and limitations may apply to you.

Vendor does not authorize any person or company to assume for it any other obligation or liability in connection with the sale, installation, use, removal, return, or replacement of its equipment, and no such representations are binding on Vendor.

ABOUT THIS PRODUCT

This product is a specialized high pressure gas appliance having greater heat output than traditional kitchen stoves. It can be referred to as a "cooker" or "appliance" in this manual. The appliance is designed to work with a cooking vessel (pot) to steam or boil food. The appliance is only designed to work with an approved hose and regulator utilizing Liquid Propane gas for fuel.

GENERAL OPERATING

- Always inspect the appliance and its components before every use as described in this manual:
  - A. Ensure appliance is properly assembled and connected to the LP cylinder
  - B. When using a thermometer, verify it is accurate and working properly
  - C. Inspect hose and tank for evidence of abrasion, wear, cuts or leaks
  - D. Confirm that nothing is obstructing the burner
  - E. Perform Gas Leak Test before lighting
- Position the appliance properly.
- Follow instructions in this manual to fill vessel with correct amount of liquid.
- Follow Lighting/Re-Lighting Instructions in this manual
- The thermometer provided MUST be used.
- This appliance will be hot during and after use; always wear protective clothing when operating the appliance. Use insulated mitts or gloves for protection from hot surfaces or splatter from cooking liquids. Wear close-toed shoes.
- Carefully monitor all activity around cooker to avoid burns or other injuries.
- Make adjustments to the regulator valve and air shutter to control temperature. Use caution when near cooker as splattered liquid may have created a slick surface.
- When removing food from the vessel, care should be taken to avoid burns from hot cooking liquids.
- When cooking is completed, turn off gas and follow the Care & Maintenance Instructions

⚠ DANGER

- **DO NOT place an empty cooking vessel on the cooker while in operation.**
- **DO NOT move the appliance while in use.**
- **Keep the fuel supply hose away from any heated surface(s).**
- **If any part or component of this appliance appears damaged or inaccurate, DO NOT USE. Call Barbour International, Inc. for a replacement part.**

ASSEMBLY INSTRUCTIONS

Read all safety warnings and assembly instructions carefully before assembling or operating your cooker.
Inspect contents in the box to ensure all parts are included and undamaged.
For missing parts or assistance, please call 1-800-864 Monday through Friday 7:30 am to 4:30 pm CST.
Proof of purchase will be required.

Model #KDS1

TOOLS REQUIRED:

Adjustable Wrench

Phillips Head Screwdriver

Hex Wrench, provided

PARTS INCLUDED:

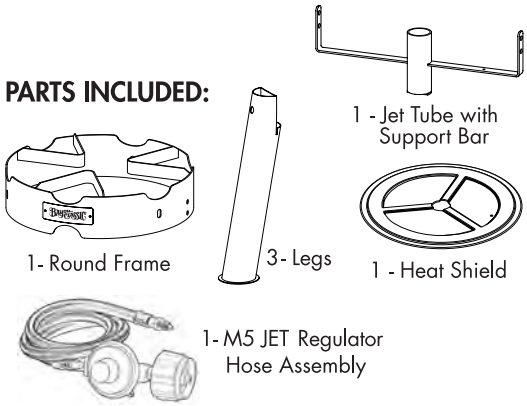

1 - Jet Tube with Support Bar

1- Round Frame

3- Legs

1 - Heat Shield

1- M5 JET Regulator Hose Assembly

3 - Long Bolts 4 - Short Bolts 1 - Set Screw 7 - Locking Nuts

COOKER ASSEMBLY

1. Remove components from the box and packing.
   Turn base frame **upside down** as shown.
   Assemble legs while in this upside down position.

2. **Attach Legs to Base Frame** - Slide legs on frame to match holes. Insert and wrench tighten all bolts and nuts.

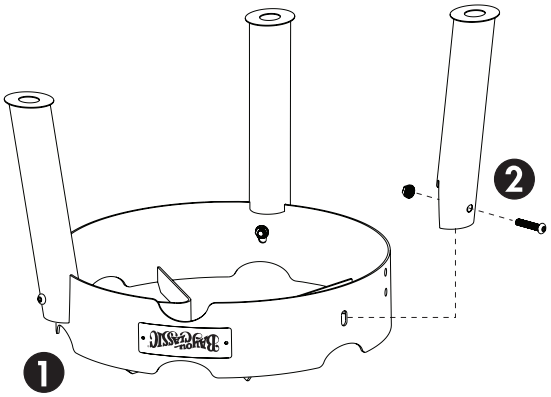

3. **Attach Heat Shield to Jet Tube and Support Bar**
   Place heat shield over jet tube and onto support bar.
   Insert the small screw through heat sheild and support bar.
   Tighten using Phillips Head screwdriver.

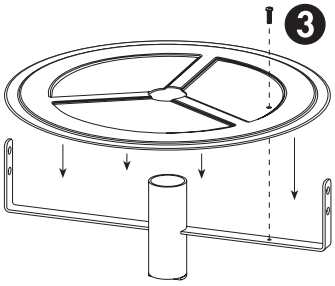

4. **Attach Jet Tube and Heat Shield to Cooker Frame**
   Turn base frame **right side up** as shown.
   Slide support bar up and match holes on interior of cooker frame. Attach using 4 short bolts.
   Wrench tighten.

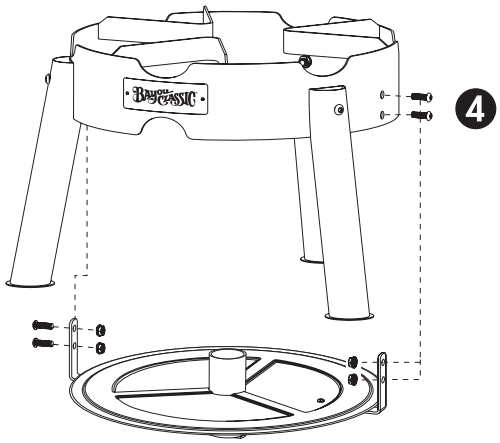

Models #KDS-182/#KDS-160/ #KDS 982

TOOLS REQUIRED:

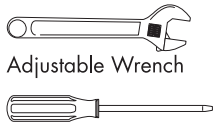

Adjustable Wrench

Phillips Head Screwdriver

Hex Wrench, provided

PARTS INCLUDED:

SAME PARTS LIST AS
#KDS1
SHOWN ABOVE

1- Cooker 1 - Stainless Stockpot

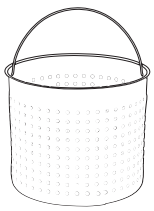

1 - Stainless Basket

Assembled View

Product color and shape may vary slightly from images due to product enhancement.

5. **Attach Hose to Jet Tube –** Insert end of hose into threaded hole at the bottom of the jet tube. Wrench tighten

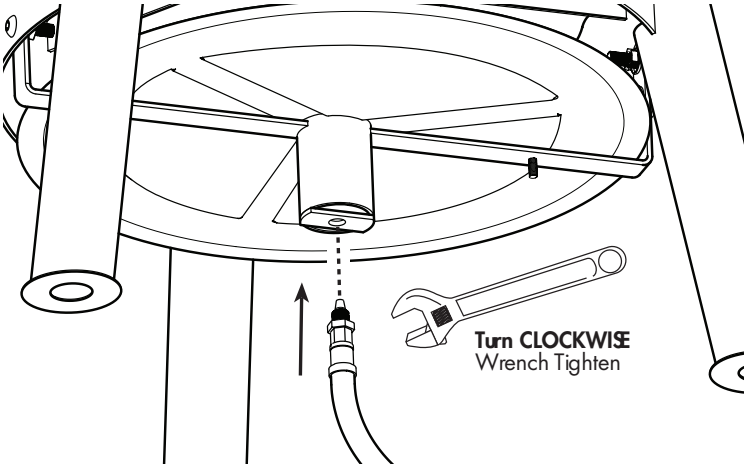

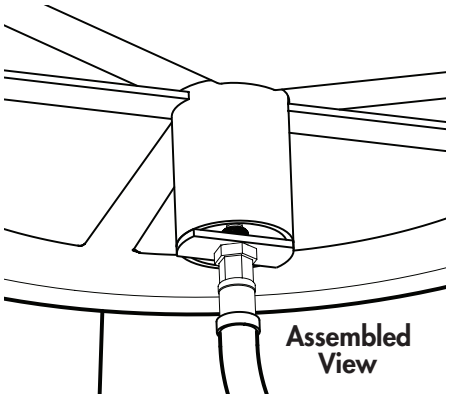

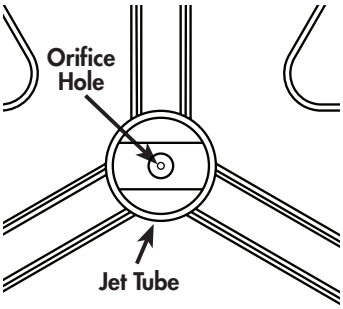

Make sure Jet Tube is clean, orifice hole facing straight up

6. **Connect Hose Valve Regulator (HVR) to LP Cylinder –**

Check that the LP cylinder is upright and the valve is closed by turning the knob as indicated on the top of the valve until fully closed. Remove the protective safety cap from the LP cylinder valve and insert the nipple of the large coupling nut into the cylinder valve outlet (confirm the coupling nut is centered). Turn the large coupling nut clockwise by hand and tighten to a full stop. Do not cross-thread, and do not use tools.

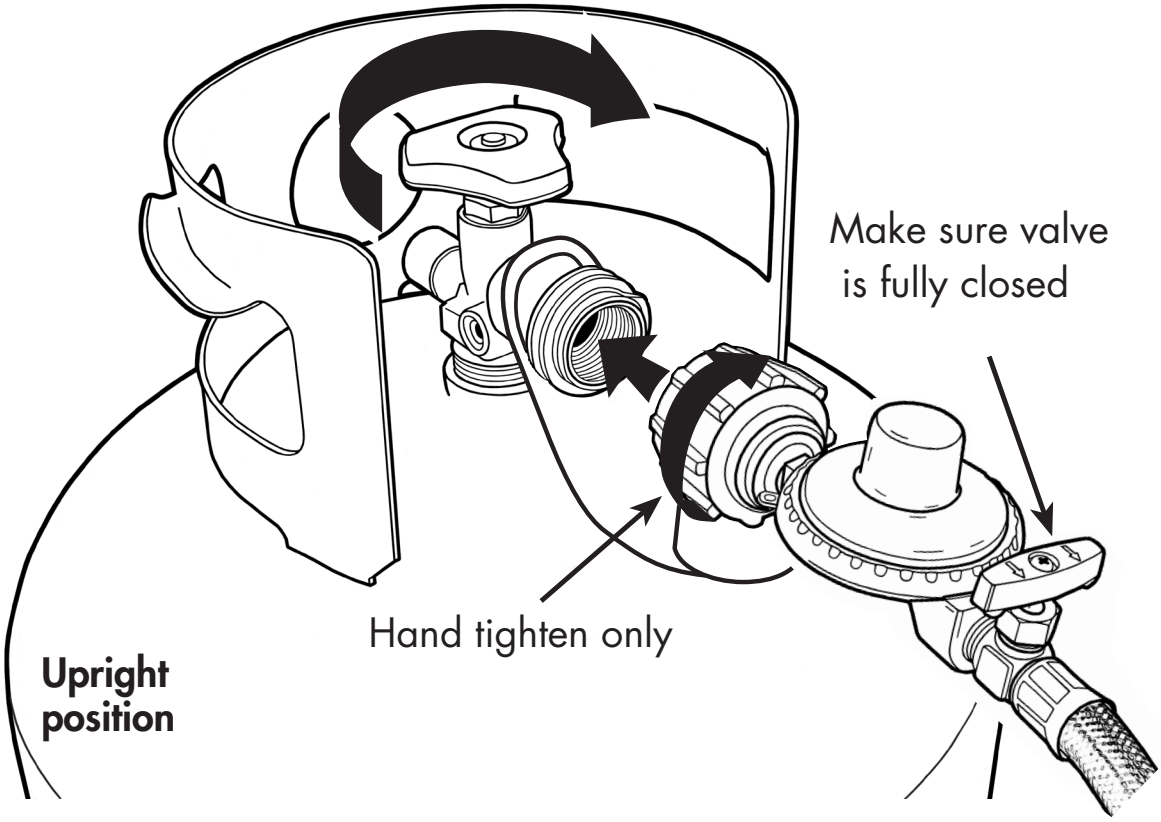

LIQUID PROPANE (LP) CYLINDER

This appliance is designed to only operate using Liquid Propane (LP) gas in a self-contained gas supply system (tank). Please follow these instructions for proper specifications and operation.

⚠ DANGER

CARBON MONOXIDE HAZARD

This appliance can produce Carbon Monoxide, an odorless and poisonous gas. Never operate this appliance in a building or confined area where ventilation may be restricted. Using it in an enclosed space can kill you.

- Read and follow all warnings and instructions on the LP cylinder.
- Specifications (These features and specifications MUST be present):
  1. 9.1 Kg/20 lbs; 31.75 cm/ 12.5 in diameter x 45.72 cm/18 in tall
  2. Type-1 gas cylinder valve outlet to accommodate the hose and regulator supplied with this appliance. The Type-1 valve must prevent gas flow until a positive seal is obtained.
  3. Over-Filling Protection Device (OPD)
  4. Collar to protect the cylinder valve
  5. Cylinder must be arranged for vapor withdrawal
  6. Protective cap
- The LP cylinder must be constructed and marked in accordance with the specifications for LP gas cylinders, U.S. Department of Transportation (DOT) or the *Standard for Cylinders, Spheres and Tubes for the Transportation of Dangerous Goods, CAN/CSA-B339*.
- If you exchange the LP cylinder, make sure the new tank complies with all the specifications listed here.

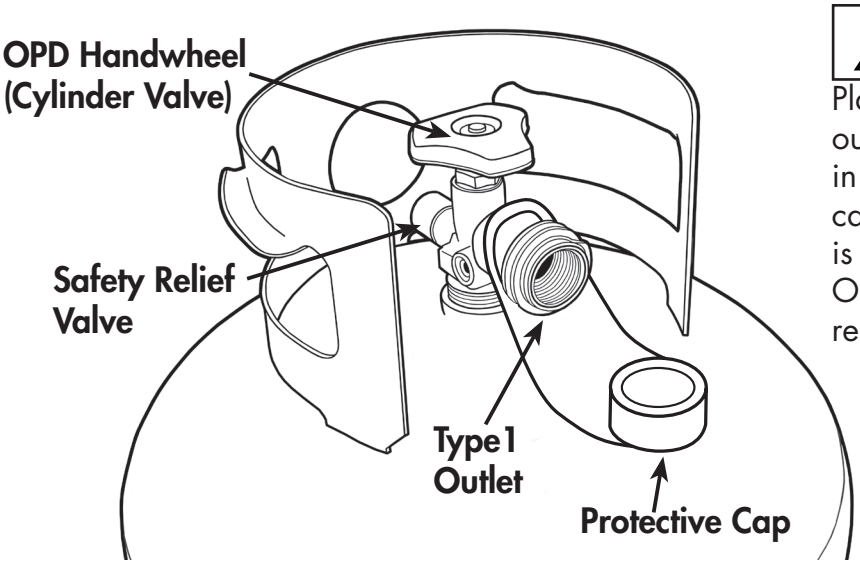

⚠ CAUTION

Place dust cap on cylinder valve outlet whenever the cylinder is not in use. Only install the type of dust cap on the cylinder valve outlet that is provided with the cylinder valve. Other types of caps or plugs may result in leakage of propane.

⚠ DANGER

A. Never store a spare LP gas cylinder under or near this appliance.
B. Never fill the cylinder beyond 80 percent full

If the information in (A) and (B) are not followed exactly, a fire causing death or serious injury may occur.

⚠ WARNING

- **Do not attempt to alter or disconnect the LP cylinder while the appliance is in use.**
- **Do not move the LP cylinder while it is connected to the appliance. Always disconnect to move the appliance and/or tank.**
- **This appliance is not designed to be connected to a Natural Gas Supply Line.**
- **The hose and regulator assembly supplied with this appliance must be used. Approved replacement parts can be obtained from Barbour International, Inc.**
- **If the appliance is not in use, the gas must be turned off at the supply LP cylinder.**
- **LP cylinders must be stored outdoors out of the reach of children, and shall not be stored in a building, garage or any other enclosed area.**
- **Allow only qualified LP gas dealers to properly fill or repair your LP cylinder.**
- **Always secure the LP cylinder in an upright position.**
- **Always use the protective cap when not connected to the hose and regulator. Only use the cap supplied with the LP cylinder; any other type may result in leakage of propane.**

THERMOMETER TEST

A thermometer is a sensitive measuring device which may not work properly if dropped, bent, or twisted. Follow these instructions before each use of your appliance.

To test thermometer, hold thermometer by the dial and insert stem into boiling water. The needle should register approximately 100°C +/- 10°C/212°F +/- 20°F . Always Replace a faulty thermometer.

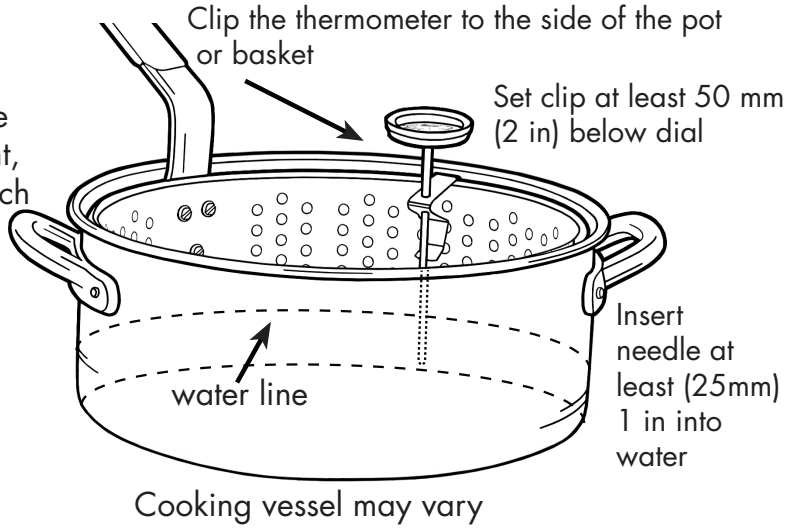

⚠ WARNING

- **NEVER insert the stem of the thermometer into food. This will cause an incorrect temperature reading.**
- **DO NOT attempt to use your thermometer if it is not working.**

⚠ WARNING

WHEN TO PERFORM A LEAK TEST

- **After assembling your cooker and before lighting for the first time, even if purchased fully assembled.**
- **Every time the LP gas cylinder is refilled or if any of the gas components are replaced.**
- **Any time your cooker has been moved.**
- **At least once per year or if your cooker has not been used for more than 60 days.**

GAS LEAK TEST INSTRUCTIONS

Note: The gas leak test must be performed in an area that has adequate lighting in order to see if bubbles are developing. **DO NOT** use a flashlight to check for bubbles.

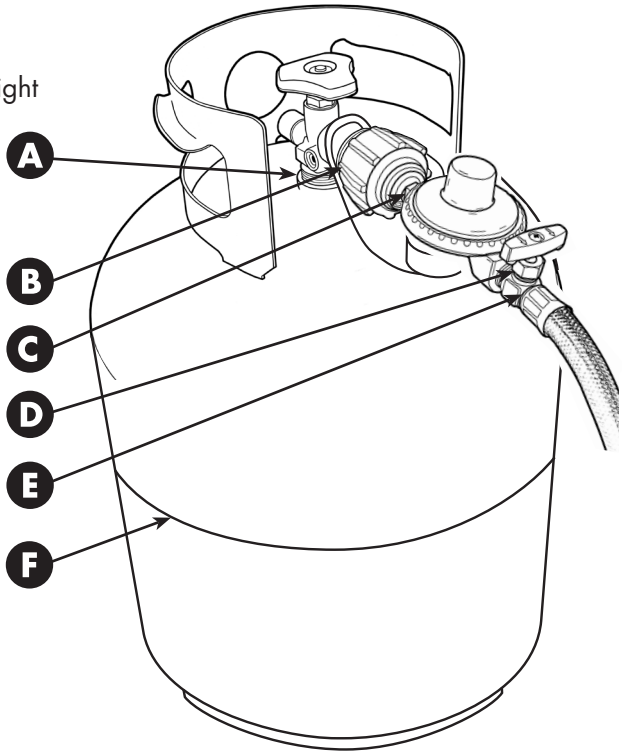

1. Create a mixture of 50% water and 50% liquid dishwashing soap.
2. Turn the gas cylinder valve to the OFF position. Then turn regulator valve to OFF position.
3. To turn ON the fuel supply, turn the cylinder valve knob one turn in open direction. Gas will flow through and stop at the closed regulator valve.
4. Using a clean brush, apply the soap water mixture to the following:
   - **A** Cylinder Valve to Cylinder
   - **B** Connection Nut to Cylinder Valve
   - **C** Back side of Connection Nut to Brass Nipple
   - **D** Brass Valve next to Regulator
   - **E** Regulator connection to Gas Supply Hose
   - **F** LP Cylinder Welds
   - **G** Full length of Gas Supply Hose
   - **H** Gas Supply Hose connection to Jet tube
5. Check each place **A - F** for growing bubbles which indicates a leak.
6. Next, turn ON brass valve to permit gas to pass through the hose. Check each place listed for growing bubbles, G & H, which indicates a leak. **NOTE: Do not allow gas to flow more than 5 - 10 seconds while checking for leaks, and then turn off gas supply at the cylinder. During this process, gas will be flowing out the jet tube into the air.**

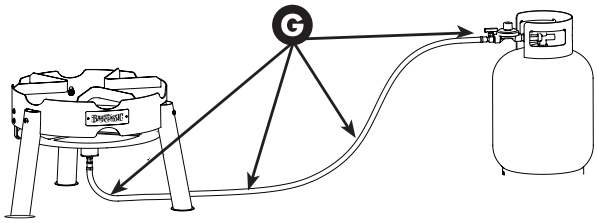

7. Turn OFF gas supply valve on LP Gas Cylinder.
8. Turn regulator valve to OFF position.
9. Tighten any leaking connections.
10. Repeat soap water mixture test until no leaks are detected. **DO NOT use cooker if gas leaks cannot be stopped.**
11. After you are certain there are no leaks, turn tank valve and regulator valve to OFF position. Wait 5 minutes for any gas fumes to evacuate before lighting the appliance.

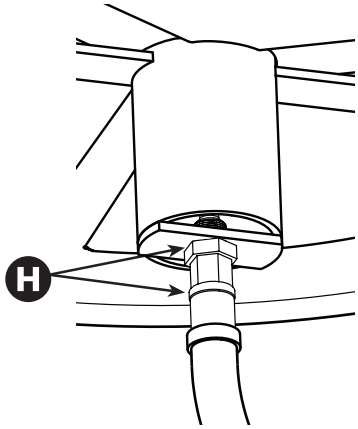

⚠ WARNING

If growing soap bubbles persist throughout any portion of the Gas Leak Test, terminate use immediately.

PLACEMENT OF COOKER

⚠ DANGER

- **This appliance is portable and should not be installed into cabinetry or any other enclosed casing. Any placement or installation of the appliance must conform with local codes or, in the absence of local codes, with the *National Fuel Gas Code, ANSI Z223.1/NFPA 54, Storage and Handling of Liquified Petroleum Gases, ANSI/NFPA 58; or Natural Gas and Propane Installation Code, CSA B149.1; Propane Storage and Handling, CSA B149.2.***
- **Keep the cooking area clear and free of any combustible material such as spare LP tanks (full or empty), household chemicals, paint, gasoline and other flammable vapors and liquids.**
- **Never enclose the appliance to block the wind. Either relocate your cooker to a less windy location, or choose not to operate your appliance until the wind has stopped.**

- Choose a safe outdoor space, clear of combustible material to operate your appliance.
- Place the appliance on a level, stable noncombustible surface such as brick, concrete, or dirt.
- Prior to lighting, check wind direction. Place cooker DOWNWIND from the LP cylinder.
- Place LP cylinder at least 50.8 cm/20 in away from the appliance.

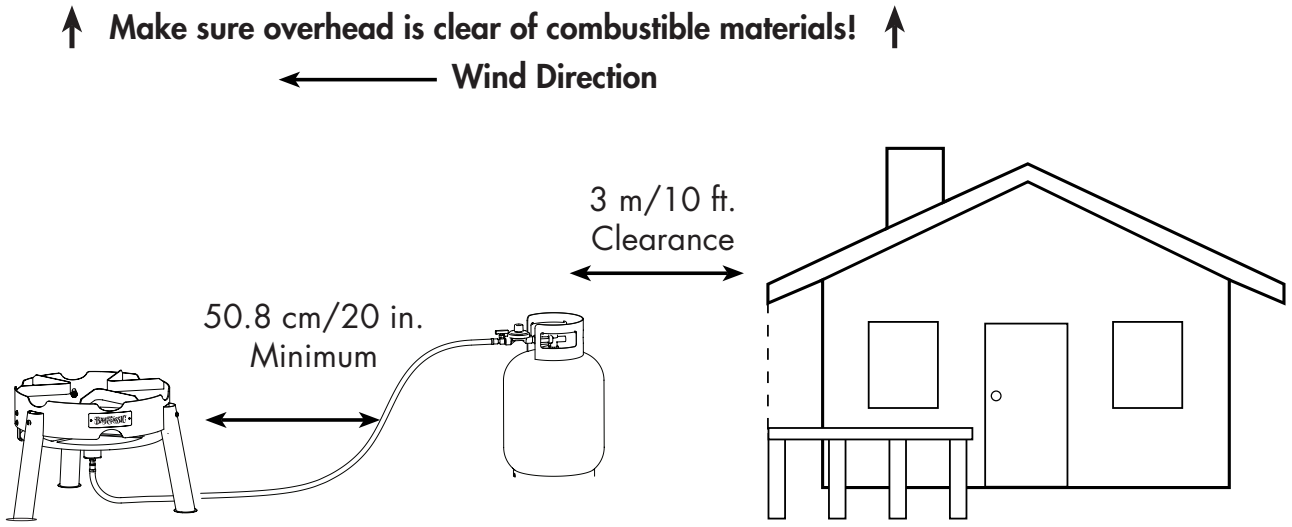

⚠ WARNING

- **Do not locate appliance closer than 3 m/10 ft from any combustible materials; including walls or railings.**
- **Do not locate appliance under overhead unprotected combustible construction or tree limbs.**
- **Do not position cooker on wood, asphalt, or plastic/rubber mat which may burn, blister, or melt.**
- **Do not attempt to move the appliance or cooking vessel when cooking.**

LIGHTING INSTRUCTIONS

Follow these instructions for safe and proper lighting and re-lighting of the appliance.

CAUTION

Do not attempt to light this appliance without first folllowing the instructions in this manual for proper assembly, placement, and testing.

WARNING

- **Do not stand with head, body or arms over the appliance when lighting. Loose hair and clothing can catch fire.**
- **Do not light burner at air intake.**

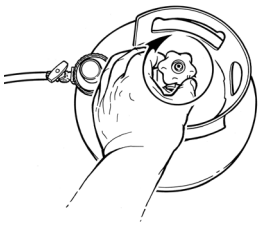

1. Make sure the LP cylinder valve is in the full OFF position. Check this by rotating the valve in the CLOSE direction until it stops.

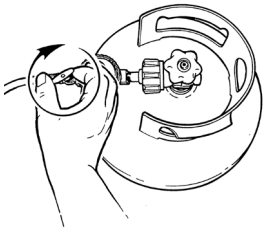

2. Make sure the HVR brass valve is in the full OFF position. Check this by rotating the valve in the CLOSE direction until it stops. NOTE: If the brass valve is left in the ON position, the Gas Flow Limiting Device will activate.

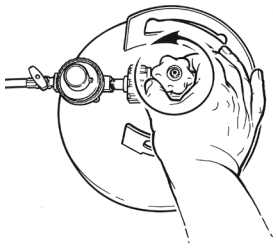

3. Turn on the fuel supply by S-L-O-W-L-Y rotating the LP cylinder valve one full turn in the OPEN direction. NOTE: To prevent activating the Gas Flow Limiting Device, always open the LP cylinder valve slowly.

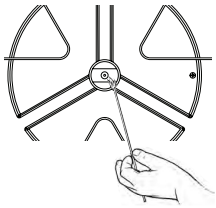

4. Position a fireplace match or long lighter over the burner, then S-L-O-W-L-Y turn the HVR brass valve OPEN until you hear gass HISSING from the burner. The burner should light immediately.

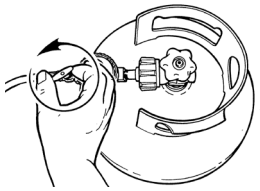

5. If the flame fails to light within 3-5 seconds, turn OFF the gas flow by rotating the HVR brass valve in the CLOSE direction until it stops. Allow gas to evacuate/dissipate before repeating Steps 3 & 4.

CAUTION

If the appliance does not light after 2 or 3 attempts, turn OFF gas supply and regulator. Refer to Trouble-Shooting Tips and DO NOT attempt to operate the appliance until the problem is resolved.

BURNER FLAME CHECK

The regulator valve controls the flame intensity. Practice adjusting the flame height to determine the ideal level. NOTE: the higher the flame intensity, the louder the jet sound.

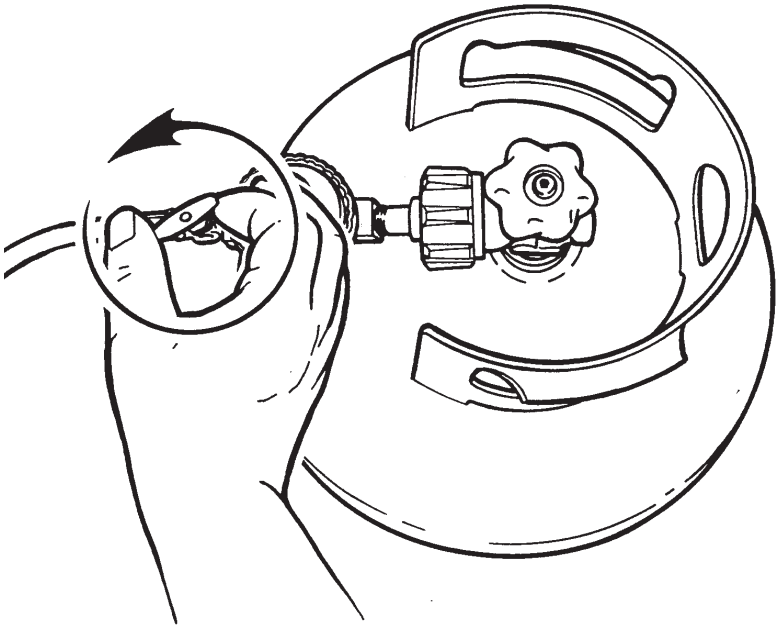

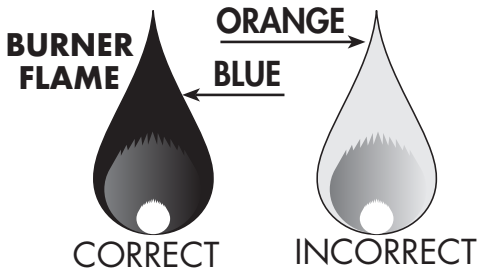

Blue flame with little or no yellow flame indicates a proper air/gas mixture and provides the best heat.

⚠ CAUTION ⚠

In sunlight or other bright light, the flame may not be visible. Always use caution around an open flame.

RE-LIGHTING

If the appliance is accidentally extinguished, turn OFF the LP cylinder valve. Wait 5 minutes to allow gas to evacuate/dissipate, repeat Steps 1 thru 4 of the Lighting Instructions.

⚠ WARNING ⚠

The appliance will be HOT after being operated. DO NOT TOUCH the frame or cooking vessel when re-lighting the burner.

BOILING INSTRUCTIONS

Use these instructions to determine maximum fill level for vessel without a maximum fill line:

A. Place the food product on the holder.

B. Place the food product and holder into the empty vessel.

C. Fill vessel with water just until the food product is completely submerged. There must be a minimum of 8 cm/ 3 in between the water level and top of the vessel.

D. Remove the food product from the vessel and either mark the water level on the side of the vessel or measure the amount of water in the vessel.

E. Remove the water and completely dry the vessel and the food product.

F. This is the amount of liquid the vessel is to be filled with to cook the food product.

Boiling time varies with the type of food being cooked. Seafood generally has the shortest boiling time. For superior cooking results, follow the "3-Minute: 15-Minute" boiling rule.

1. Heat water to rolling boil. Depending on the size of cooking vessel and volume of water used, heat up time can range from 15 to 45 minutes. Covering the cooking vessel with a lid will accelerate water heat up time to the boiling point.

2. Reduce cooker flame and carefully lower food basket into boiling water and cover the pot.

3. Increase cooker flame and cook until a rolling boil is achieved.

4. Leaving pot covered, reduce cooker flame and allow rolling boil to continue for 3-minutes.

5. After 3-minutes have passed, shut off gas to the cooker. Leave the pot covered and allow the food to set for 15-minutes. During this 15-minute period, the food will continue to cook and absorb seasoning without being over-cooked.

Generally, the "3-Minute: 15-Minute" rule results in shrimp and crawfish being perfectly cooked, seasoned and easy to peel.

6. Remove basket from cooking vessel:

a. Shut off gas to the cooker.

b. Wearing an insulated glove or mitt, carefully remove lid from pot.

c. Slowly lift basket from the cooking vessel (this may require two people).

d. Hold the basket above the cooking vessel to allow hot water to drain.

7. Gently pour out the food into a serving dish and enjoy!

STEAMING INSTRUCTIONS

Steaming typically works best with a basket that sits with the bottom approximately 2-3 inches above the bottom of the pot.

1. Pour 3 -4 inches of water into the pot. NOTE: When steaming, your food should not be submerged in the water. Do not overfill.

⚠ CAUTION

Heat up time will be fast, so have your food prepared before lighting the appliance.

2. Heat water to a boil.
3. Reduce cooker flame and carefully lower food basket into cooking vessel and cover the pot.
4. Leave the cooker flame set low during cooking to maintain a steady boil.
5. When steaming is done:
    a. Shut off gas to the cooker.
    b. Wearing an insulated glove or mitt, carefully remove lid from pot.
    c. Slowly lift basket from the cooking vessel (this may require two people).
6. During extended steaming times, you will need to occasionally add water to the pot.

⚠ DANGER

- **Do not allow water to completely evaporate from the pot. The bottom of the cooking vessel will quickly warp or melt. Never allow the water in the vessel to reduce below one inch from the bottom.**

⚠ WARNING

- **Lifting a pot filled with liquid can result in serious back and bodily injury**
- **Hot splashing liquids can result in severe burns.**
- **Never pour a hot liquid from one pot to another.**

MAINTENANCE & CARE

Follow these simple steps to keep your appliance looking good and functioning properly for years.

1. Before each use of the appliance, light the cooker and let it run for 5-7 minutes. This initial fire will burn away the manufacturing oil and residue. It is normal to have smoke or slight odor.

2. Always turn OFF the gas supply and disconnect the hose and regulator from the LP cylinder to move or store.

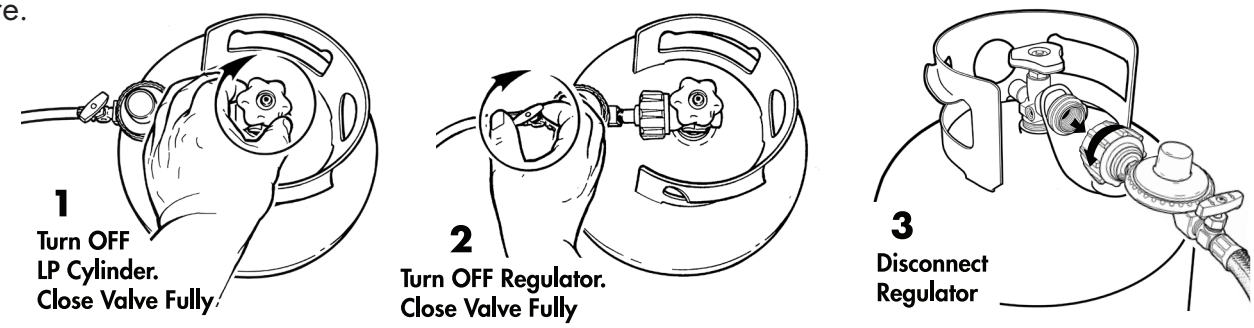

3. If you ever experience a spill over while cooking, make sure you clean off the cooker before storing. Wait until the cooker is completely cool, and simply spray off the residue from the spill-over. NOTE: The next time your use the cooker, it may burn off residue from the previous spill-over, causing an odor and/or smoke.

4. The HVR supplied with this kit is an independently CSA certified product. Read and follow all instructions and warnings on the supply hose safety tags. If there is evidence of abrasion, wear, cuts or leaks, the hose must be replaced prior to the appliance being put into operation. No matter the physical appearance, replace the hose and regulator assembly every two years. Replace only with regulator **Model #M5JET.**

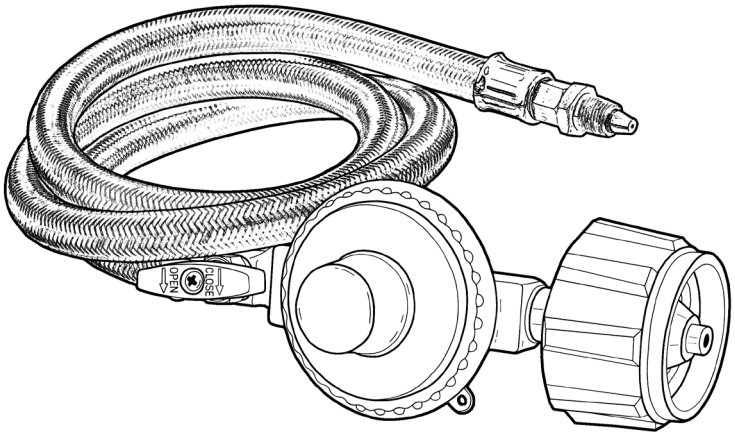

⚠ WARNING

- **Do not attempt to adjust or repair the hose and regulator assembly. Contact Barbour International, Inc. for a replacement.**
- **Do not attempt to disassemble any part of the hose and regulator assembly.**
- **The brass valve is NOT and ON/OFF control. It only adjusts the intensity of the flame. Use the LP cylinder OPD Handwheel to turn off the gas supply.**
- **Always turn OFF at the LP cylinder OPD Handwheel before attempting to connect or remove the regulator.**
- **Never allow the hose to come in contact with sharp edges, or any surfaces that may become hot during use.**

5. Always check the jet tube for any obstructions such as insects or insect nests in the burner. To remove burner obstructions, use a narrow bottle brush or stiff wire bent into a small hook to run up and down the length of the burner tube.

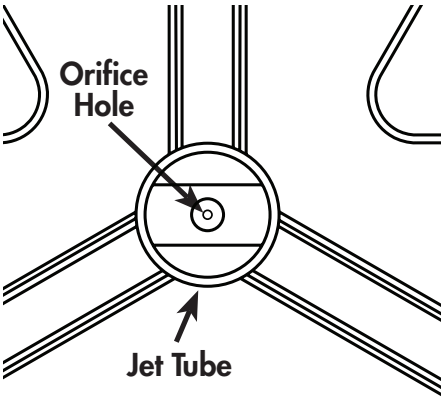

WARNING

- **Check and clean the appliance with every use. A clogged jet tube can lead to a fire beneath the appliance.**
- **Do not obstruct the flow of combustion and ventilation air.**

6. Before using for the first time, wash your pot and basket with hot soapy water. Dry immediately to prevent water spots.

7. To prevent scratches, avoid using sharp utensils with your pot or basket.

8. Discoloration of stainless steel will result from exposure to excessive heat. For hard to clean stains or discoloration of the pot, apply a non-abrasive stainless steel cleaner with a clean, damp sponge or cloth. Do not use a steel wool pad or harsh abrasive cleanser as scratching will occur.

9. Overheating may cause food to scorch and stick to cookware.

10. Never store liquids in cooking vessels. Salt and seasoning will weaken the integrity of the pot.

11. Boiling with large quantities of salt is very corrosive and can cause pits in all forms of cookware. To reduce the chance of this occurring, add salt after water begins to boil. Clean cookware thoroughly after each use.

12. Store appliance in a dry place. If storing indoors (including a shed or garage), detach the LP cylinder and store the tank outside. For long term storage, cover the burner and the HVR with a plastic bag.

13. Do not store this appliance, or any of its components, in a corrosive environment. A corrosive environment can be a highly damp area, or a saltwater/marine environment. Stainless Steel is an iron-based alloy that contains a minimum of 11% chromium to make it resist rust, or stain “less” than other steels. Please note that name is not “stain-never”, but stainless and that is precisely what it will do – it will stain-less.

TROUBLE-SHOOTING

Contact Barbour International, Inc. customer service at **1-800-864-6194**, or visit **www.thebayou.com.**

Symptom	Cause	Possible Solution
Burner will not light	Obstruction in the jet tube	Disconnect hose and regulator. Inspect and clean cooker.
	Part of appliance is damaged	Inspect LP tank, cooker, and HVR assembly for damage. Contact Barbour International, Inc. to replace damaged parts.
	LP tank has low fuel	Use a tank fill gauge to always know gas level. If gas is too low to operate, refill or exchange tank.
Burner is clean, but still will not light	Not enough gas flow from tank	Open LP cylinder valve all the way.
	LP tank has low fuel	Use a tank fill gauge to always know gas level. If gas is too low to operate, refill or exchange tank.
	Damaged hose & regulator assembly	Contact Barbour International, Inc. to replace damaged hose and regulator assembly.
Yellow, sooty irregular flame	Obstruction in the jet tube	Disconnect hose and regulator. Inspect and clean burner. Inspect and clean cooker.
Cooker lights, but flame is very small	LP tank has low fuel	Use a tank fill gauge to always know gas level. If gas is too low to operate, refill or exchange tank.
	Gas Flow Limiting Device has activated	Turn LP cylinder valve and HVR brass valve OFF. Wait 30 seconds and repeat steps for lighting.
Flame dramatically reduces, and LP cylinder has frost on it.	LP tank has low fuel	Use a tank fill gauge to always know gas level. If gas is too low to operate, refill or exchange tank.
	Extended cooking on HIGH (the liquid propane is freezing inside the tank.	Turn unit OFF, and stop cooking until frost melts and tank is no longer cold to the touch. If you return to cooking with the same LP tank, operate with a less intense flame.
Hissing or gurgling sounds coming from appliance	Damaged or leaking hose and regulator assembly	Turn unit OFF and wait for it to cool down. Perform Gas Leak Test to confirm gas leak. Contact Barbour International, Inc. to replace damaged hose and regulator assembly.
Flame has gone out	LP tank has low fuel	Use a tank fill gauge to always know gas level. If gas is too low to operate, refill or exchange tank.
	Too windy	Check wind direction and wait for wind to die down, or set cooker away from windy areas.

OTHER Bayou Classic® PRODUCTS

Stainless Steel Stockpots

Aluminum Stockpots

Accessories

Cast Iron Cookware

Stainless Steel Fryers

Jambalaya Kits

Outdoor Smoker Grills and Charcoal

FOR OTHER PRODUCTS
BAYOU CLASSIC®
CHECK OUT
OUR WEBSITE!
www.thebayou.com